120mA, HV LED Driver with Internal MOSFET TJ33120

FEATURES

- Input voltage at pin DRAIN 20 V ≤ VIN ≤ 400 V
- Operating temperature range: -40 °C to 85 °C
- Resistance of the DRAIN-GND open key in on condition of RON is not more than 40 Ω at the ambient temperature of 25 ºC
- Breakdown voltage of the closed key at the pin DRAIN VBR not less than 460 V
- Average stabilization current at pin DRAIN: 120 mA ±5 %
- Load Short circuit protection
- Overheating protection

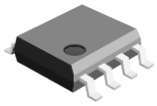

SOP-8

APPLICATION

- DC/DC or AC/DC LED Driver
- Decorative Lighting

ORDERING INFORMATION

Device	Package
TJ33120GD	SOP-8

* For the details, see ordering information.

DESCRIPTION

The TJ33120 is high voltage LED driver with the internal MOSFET is intended for LED chain control.
The TJ33120 ensures control and stabilization of the current average value in the LED circuit by means of commutation the current pulses in the inductor in the PWM mode with the fixed switch-off time with application of the built-in MOSFET switch. IC contains the internal high voltage MOSFET switch with the voltage of 400 V, voltage regulator, reference voltage source, switch-off time countdown timer, control circuit of the current average value in the LED circuit, overheating and load short-circuit protection circuits, digital logic control circuits and analog comparators.
TJ33120 can be supplied from the DC input voltage of 20 V to 400 V or the AC input voltage 85 V to 265 V.

ABSOLUTE MAXIMUM RATINGS (Note 1)

CHARACTERISTIC	SYMBOL	MIN.	MAX.	UNIT
Input DRAIN Voltage (Survival)	V_{DRAIN}	-0.3	420	V
Input VDD Voltage (Survival)	V_{DD}	-0.3	10	V
Lead Temperature (Soldering, 5 sec)	T_{SOL}		260	ºC
Storage Temperature Range	T_{STG}	-65	150	ºC

RECOMMENDED OPERATING RATINGS (Note 2)

CHARACTERISTIC	SYMBOL	MIN.	MAX.	UNIT
Input DRAIN Voltage	V_{DRAIN}	20	400	V
Recommend Operating Input Voltage	V_{DD}	5.0	9.5	V
Operating Junction Temperature Range	T_{JOPR}	-40	125	ºC
Recommend Operating Temperature Range	T_A	-40	85	ºC

ORDERING INFORMATION

Order No.	Package	Description	Supplied As	Status
TJ33120GD	SOP-8	120mA, Internal MOSFET	Reel	Active

PIN CONFIGURATION

SOP-8

(Top View)

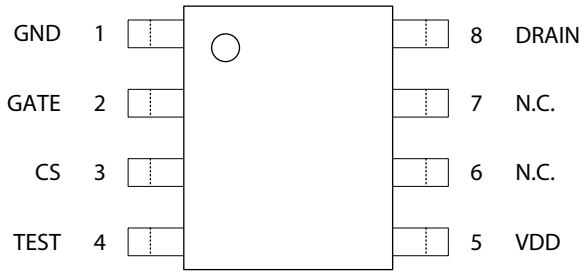

PIN DESCRIPTION

Pin No.	Pin Name	Pin Description
1	GND	Ground
2	GATE	(Internal Use/ Float this pin) Gate
3	CS	(Internal Use/ Float this pin) Current Sense
4	TEST	(Internal Use/ Float this pin) Test for Internal Function
5	VDD	Supply from the Voltage Source
6	N.C.	Not Connected
7	N.C.	Not Connected
8	DRAIN	Drain Terminal of the Internal MOSFET

BLOCK DIAGRAM

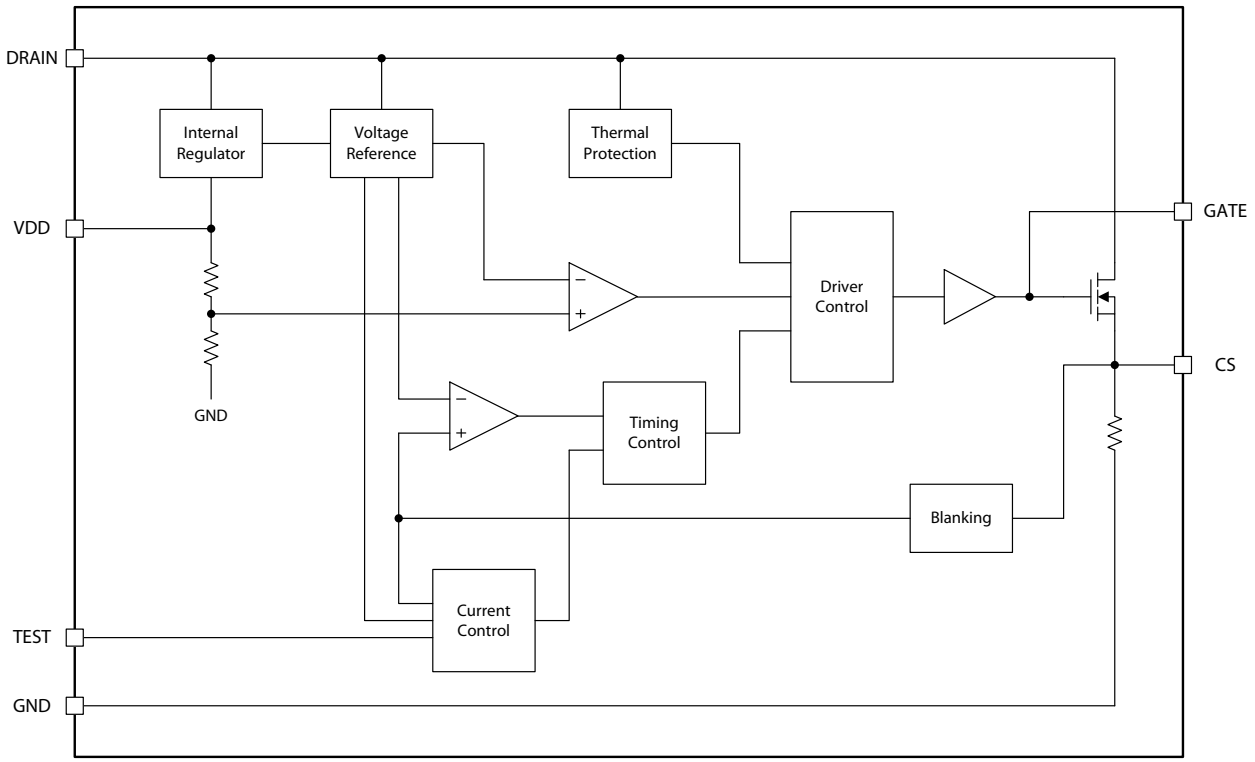

TYPICAL APPLICATION

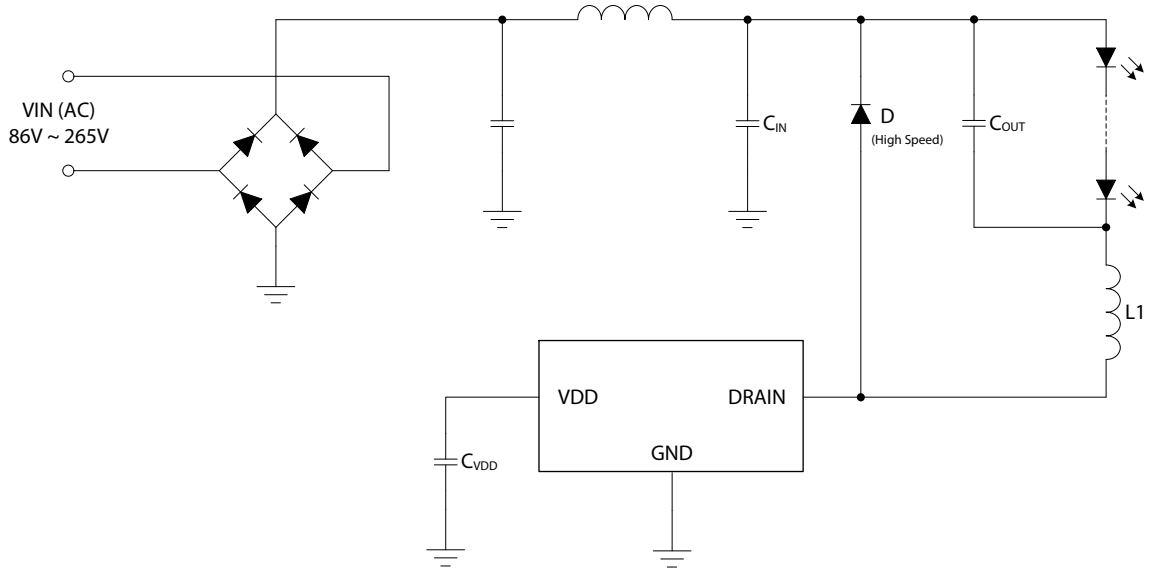

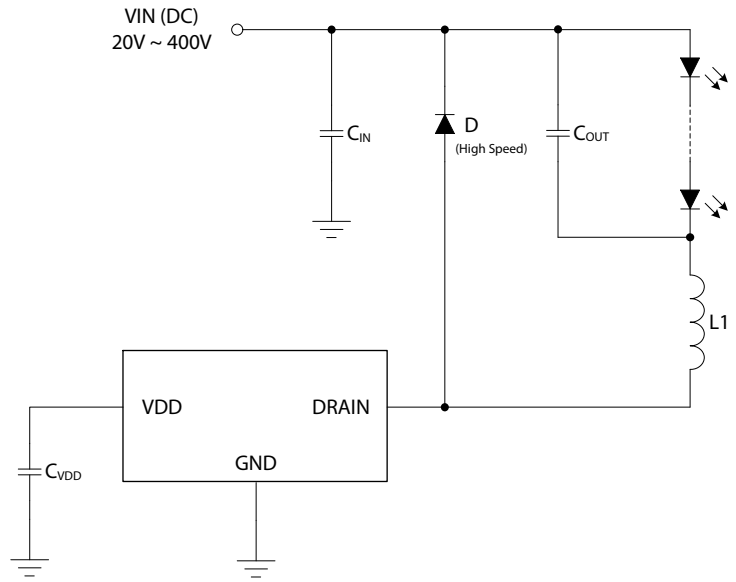

ELECTRICAL CHARACTERISTICS (Note 3)

Limits in standard typeface are for T_J=25ºC, and limits in **boldface type** apply over the **full operating temperature range**.

PARAMETER	SYMBOL	TEST CONDITION	MIN.	TYP.	MAX.	UNIT
Internal Regulator Output Voltage	V_{DDR}	V_{IN} = 20 V, V_{IN} = 400 V	5.5 **5.0**	-	8.5 **9.5**	V
Input UVLO Threshold	V_{UVLO}	V_{DD} = V_{UVLO}	4.0 **3.8**	-	V_{DDR}-0.3V **V_{DDR}-0.1V**	V
Supply Current	I_{DD}	V_{DD} = V_{DDR} + 0.2 V, V_{IN} = 40 V	**-**	-	400 **600**	μA
MOSFET On-Resistance	R_{DS_ON}	V_{DD} = V_{DDR}, I_{DRAIN} = 120 mA	-	-	40 **60**	Ω
MOSFET Breakdown Voltage	V_{BR}	V_{DD} = 8.5 V, I_{DRAIN} = 0.2 mA	500 **460**	-	**-**	V
Output Average Current	I_{AVG}	V_{DD} = V_{DDR}	114 **112**	-	126 **128**	mA
Output Short Circuit Current	I_{SC}	V_{DD} = V_{DDR}	160 **150**	-	240 **260**	mA
SW Minimum On-Time	T_{ON_MIN}	V_{DD} = V_{DDR}	-	-	1000	ns
SW Off-Time	T_{OFF}	V_{DD} = V_{DDR}	8 **7**	-	13 **14**	μs
SW Blanking Time	T_{BLANK}	V_{DD} = V_{DDR}	200	-	400	ns
Output Short Circuit Hiccup Time	T_{HICCUP}	V_{DD} = V_{DDR}, I_{DRAIN} > 260mA	350 **280**	-	-	μs

Note 1. Exceeding the absolute maximum ratings may damage the device.

Note 2. The device is not guaranteed to function outside its operating ratings.

Note 3. Stresses listed as the absolute maximum ratings may cause permanent damage to the device. These are for stress ratings. Functional operating of the device at these or any other conditions beyond those indicated in the operational sections of the specifications is not implied. Exposure to absolute maximum rating conditions for extended periods may remain possibly to affect device reliability.

Note 4. Parameters are not 100% tested. Majority of all units meet this specification.

TYPICAL OPERATING CHARACTERISTICS

T.B.D.

REVISION NOTICE

The description in this datasheet can be revised without any notice to describe its electrical characteristics properly.